Village of Menomonee Falls
W156 N8480 Pilgrim Road
Menomonee Falls, WI 53051-3140
Telephone: (262) 532-4200

STORMWATER MANAGEMENT FACILITIES OPERATION AND INSPECTION REPORT

Quarter Section: 05 SE
Property Tax ID Number: 0020994005
Name of Business/Subdivision: N/A
Address of Property: N/A

Dry Pond	
Wet Pond	X
Other	

Description: SWP05S001
P-0153

Location Of Pond: WEST OF MAPLE RD AT CHRISTMAN RD "WETLAND SCRAPE"

Year Pond Constructed: 2014
Year of Last Certification: NONE

Compliance Verification	Design (Non-AsBuilt)	Actual (GPS)	Compliant Yes	Compliant No	Comments (Condition of Structure)
Primary Outlet Pipe					Outlet Pipe Material
Opening Diameter (inches)	-	-	-	-	REFER TO "UPPER DISCHARGE CONTROL"/ "LOWER DISCHARGE CONTROL" DATA FOR STRUCTURE ST014119.
Upstream Invert	-	-	-	-	
Downstream Invert	-	-	-	-	GPS SURVEY ELEVATIONS CONSISTENTLY 0.36' LOWER THAN PLAN ELEVATIONS.CMG
Length (feet)	-	-	-	-	
Slope (%)	-	-	-	-	ELEVATIONS TO VARY SLIGHTLY FROM YEAR TO YEAR DUE TO GPS TECHNOLOGY
Secondary Outlet Pipe	N/A				Outlet Pipe Material
Opening Diameter (inches)	-	-	-	-	
Upstream Invert	-	-	-	-	
Downstream Invert	-	-	-	-	
Length (feet)	-	-	-	-	
Slope (%)	-	-	-	-	
Riser	N/A				Riser Material
Opening Diameter (inches)	-	-	-	-	
Elevation	-	-	-	-	@ TOP OF LOWEST ENTRY POINT FOR WATER ABOVE WEIR
Upper Discharge Control	ST014119				
Opening Diameter	N/A	SEE NOTE	-	-	V-NOTCH WEIR APPROX. 84" WIDE AT TOP ELEVATION AT TOP OF WEIR = 862.15
Elevation	862.50	862.15	-	-	

Compliance Verification	Design	Actual	Compliant Yes	No	Comments
Lower Discharge Control	ST014119				
Opening Diameter	N/A	SEE NOTE	-	-	V-NOTCH WEIR APPROX. 12" WIDE AT BASE ELEVATION AT BOTTOM OF WEIR = 858.66
Elevation	859.00	858.66	-	-	
Other (Description)	N/A				
Opening Type and Size (inches)			-	-	
Elevation			-	-	
Emergency Spillway					
Elevation	860.60	860.80	-	-	
Length of spillway (feet)	72.4 FT	79.4 FT	-	-	

Embankment	Present Yes	No	Comments/Maintenance Requirements
Unauthorized Plantings, trees, or woody vegetation	-	N	
Animal burrows or slope erosion or hole	-	N	

Storm Sewer Outfalls	Type & Size	Location	Comments
Outfall 1 (ST013545)	12FT X 3FT RCP	SOUTHEAST POND	BOX CULVERT, GOOD CONDITION
Outfall 2 (ST013548)	42"x28" RCP	SOUTHEAST POND	GOOD CONDITION
Outfall 5			

Storage Properties	Design (NON-ASBUILT)	Actual (GPS)	Compliant Yes	No	Not Applicable	Equipment Used
Normal Water Elevation *(Wet Ponds)*	859.00	858.85	-	-		GPS EQUIPMENT: SOKKIA GSR2700ISX & CARLSON SURVEYOR+ WITH SURV CE v1.7
Design High Water Elevation	861.67	860.80	-	-		
Area at Normal Water Elevation (Ac) (Wet Ponds)	N/A	1.286 AC	-	-		
Area at Design High Water Elevation (Ac)	N/A	4.650 AC	-	-		GPS SURVEY ELEVATIONS CONSISTENTLY 0.36' LOWER THAN PLAN ELEVATIONS.CMG
Active Storage Available (Ac-Ft)*	N/A	5.778 ACFT	-	-		
Lowest Elevation at Top of Embankment (If Applicable)	860.60	860.80	-	-		
Average Elevation at Top of Embankment (If Applicable)	862.50	861.80	-	-		
Maximum Bottom Elevation	800.60	858.80	-	-		
Average Pond Bottom Elevation	860.00	859.00	-	-		
Pond Bottom Area (Ac)	N/A	1.286 AC	-	-		
Maximum Pond Depth	2.67 FT	2.07 FT	-	-		
Average Pond Depth	2.0'	2.00 FT	-	-		
Average Permanent Pool Depth *(Wet Ponds)*	0.4 FT	0.4 FT	-	-		

*To Determine Active Storage $V = ((H/3)(A1 + A2 + ((A1 + A2)^{(1/2)})))$

Wet Ponds Use *H = Height of Section , A1= area at normal water elevation, A2=area at top section*

Dry Ponds Use *H= Height of Section, A1= pond bottom area, A2=area at top section*

Maple Road Wetland – SWP05S001

Overview

Storm Water Inlet ST013545 (Left) | Storm Water Inlet ST013548 (Right)

Maple Road Wetland – SWP05S001

Overflow Weir Structure ST014119

Overflow Weir Structure ST014119

Maple Road Wetland – SWP05S001

Maple Road Ditch

Weir Ditch

Maple Road Wetland – SWP05S001

Emergency Spillway

Google Maps

Imagery ©2015 DigitalGlobe, U.S. Geological Survey, Map data ©2015 Google 100 ft

Sketch Outlet	*Place Photograph of Pond*
	Place Photograph of Pond

Inspection Firm:	VILLAGE OF MENOMONEE FALLS	Inspector Name :	CHRISTOPHER M GARIEPY
Phone Number:	262-532-4411	Inspection Date:	8/26/2015
Address:	W156N8480 PILGRIM RD MENOMONEE FALLS, WI 53051		

Certifying Professional Name: *THOMAS M. HOFFMAN, P.E.*

Phone Number: *(262) 532-4415*

Date:	*Signature:*	*Affix Seal Here*
2/26/16		WISCONSIN THOMAS M. HOFFMAN E-33370 BROOKFIELD WIS PROFESSIONAL ENGINEER

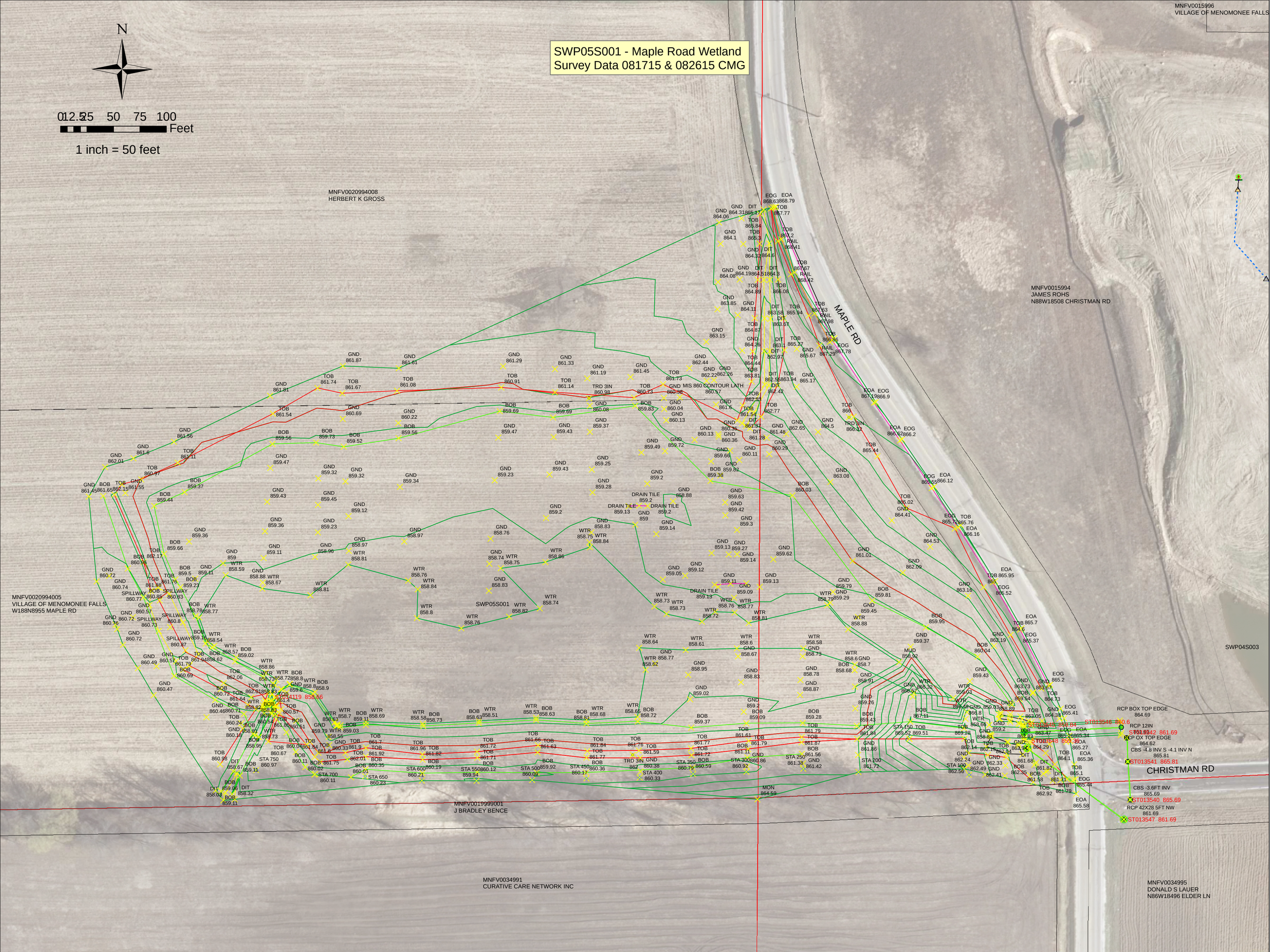
SWP05S001 - Maple Road Wetland
Survey Data 081715 & 082615 CMG
N
0 12.5 25 50 75 100
Feet
1 inch = 50 feet
MNFV0015996
VILLAGE OF MENOMONEE FALLS
MNFV0020994008
HERBERT K GROSS
MNFV0015994
JAMES ROHS
N88W18508 CHRISTMAN RD
MAPLE RD
MNFV0020994005
VILLAGE OF MENOMONEE FALLS
W188N8955 MAPLE RD
SWP05S001
SWP04S003
CHRISTMAN RD
MNFV0019999001
J BRADLEY BENCE
MNFV0034991
CURATIVE CARE NETWORK INC
MNFV0034995
DONALD S LAUER
N86W18496 ELDER LN

REVISION/PLOT DATE

Sht02_Plan&Profile.dgn 4/23/2014 workspaceics
PLOT BY : greisbj

NOTE: TOP OF CURB ELEVATIONS ARE 0.06' HIGHER THAN FINISHED CENTERLINE ELEVATIONS.

SEE SHEET #5

3'x12' CONC BOX CULVERT, 90' @ 2.00%

28 CY OF MEDIUM RIPRAP

12+55, 50'LT
IE=859.20

12+53, 38'LT
IE=859.72

104'-29"x45" HERCP PLUS APRON ENDWALLS, 120' @ 2.00%

EXISTING ROW LINE

REMOVE CULVERT & DRIVE ACCESS

13+13.44 CHRISTMAN RD = 40+00.05 MAPLE RD

REMOVE CULVERT & DRIVE ACCESS

REDITCH

ASPHALTIC FLUME

13+45, 50'LT
IE=861.00

28 CY OF MEDIUM RIPRAP

13+51, 42'LT
IE=862.12

866.46 TOC

866.60 TOC

13+49.62
38.5'LT

866.80 TOC

18" WHITE STOP LINE

WARNING! TELE CABLE

866.57 TOC

13+51, 36'LT
IE=862.15

866.83 TOC

866.57 TOC

INLET PROTECTION (TYP)

867.08 TOC

13+50.12
38.5'RT

13+47, 37.8'RT
IE=862.12

TAX KEY NO. MNFV-0015-994 JIM ROHS

TLE

SEE DETAIL SHEET & CROSS SECTIONS FOR WORK IN THIS AREA

EXISTING POND

RELOCATED RIPRAP

NEW SPILLWAY

NEW TOP OF BERM

NEW ROW

REMOVE & RELOCATE RIPRAP (INCIDENTAL TO OTHER WORK)

TELEPHONE PEDESTALS TO BE RELOCATED BY OTHERS

FUTURE WALK

DITCH CL (TYP)

REMOVE CULVERT & DRIVE ACCESS

MOVE SIGN (TYP) COST INCIDENTAL TO OTHER WORK

POWER POLE TO BE RELOCATED BY OTHERS

NEW 30" CONCRETE CURB & GUTTER

POWER POLE TO BE RELOCATED BY OTHERS

7 CY OF MEDIUM RIPRAP

NEW ROW

DITCH CL (TYP)

CAUTION GAS (TYP)

DITCH CHECK (TYP)

TLE

SLOPE INTERCEPT (TYP)

TAX KEY NO. MNFV-0034-995 DONALD LAUER

EROSION CONTROL FABRIC TO BE PLACED ON ALL DISTURBED AREAS BETWEEN BACK OF CURB & SLOPE INTERCEPT

THE LOCATION OF UNDERGROUND STRUCTURES OR FACILITIES SHOWN ON THE PLANS ARE BASED ON AVAILABLE RECORDS AT THE TIME OF PREPARATION AND ARE NOT GUARANTEED TO BE COMPLETE OR CORRECT. THE CONTRACTOR IS RESPONSIBLE FOR CONTACTING ALL UTILITIES 72 HOURS PRIOR TO CONSTRUCTION TO DETERMINE THE EXACT LOCATION OF ALL FACILITIES AND TO PROVIDE ADEQUATE PROTECTION DURING THE COURSE OF THE WORK.

SEE SHEET #5

MAPLE RD

CHRISTMAN ROAD

SEE SHEET #3

CATCH BASIN								STORM SEWER	
NO	TYPE	STATION	FL	TOC	IE	IE	DEPTH	LEAD	GRADE
IA	3067	13+51.4, 17.12'RT	866.03	866.57	862.53	-	3.50'	35'-12"	0.50%
AS-BUILT									
IB	3067	13+50.9, 17.12'LT	866.03	866.57	862.35(S)	862.25(N)	3.78'	19'-12"	0.50%
AS-BUILT									

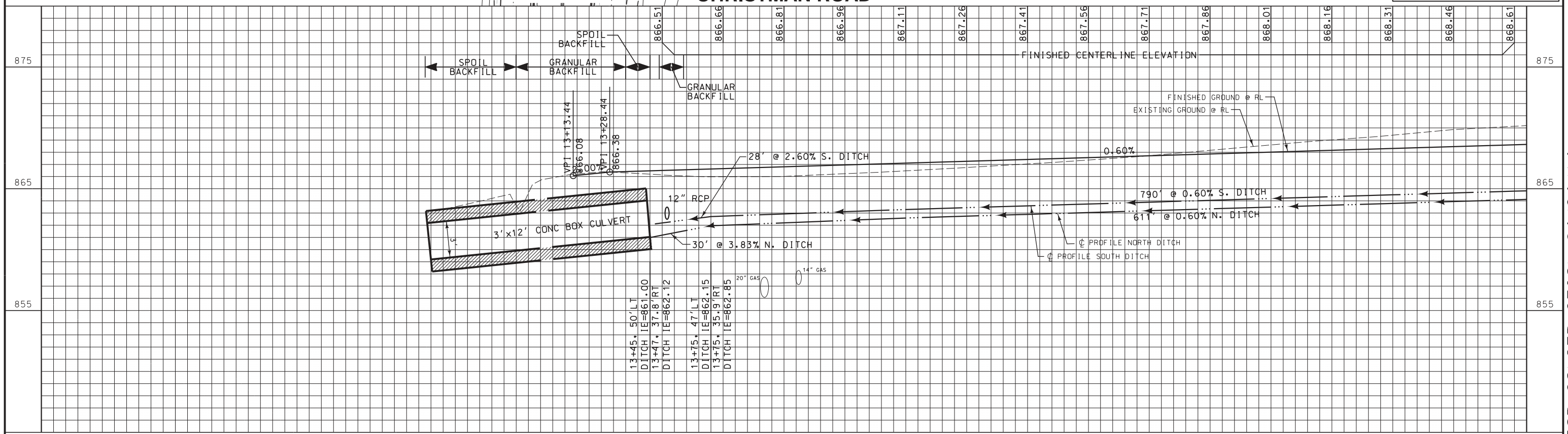

NO.	REVISIONS	BY	DATE

ALL RIGHTS RESERVED

DRAWN BY: PRELIM BJG FINAL BJG
DATE APRIL, 2014
DESIGNED BY D.PINKOWSKI
CHECKED BY T.HARTJES
SCALE HORZ: 1"=40' VERT: 1"= 8'

REVISED TO CONFORM TO CONSTRUCTION RECORDS
DATE BY

gai consultants
W175 N11081 STONEWOOD DRIVE, SUITE 103
GERMANTOWN, WI 53022
262.250.8000 • FAX 262.250.8011

CHRISTMAN ROAD RECONSTRUCTION
VILLAGE PROJECT NO. 41167
VILLAGE OF MENOMONEE FALLS
WAUKESHA COUNTY, WISCONSIN

PROJECT NO. R12-0063-100
SHEET NO. 2 OF 21
FILE NO. F-28678

RELEASED FOR CONSTRUCTION 04/24/14

REVISION/PLOT DATE

Sht05_Plan&Profile.dgn 4/23/2014 workspaceca
PLOT BY : greisbj

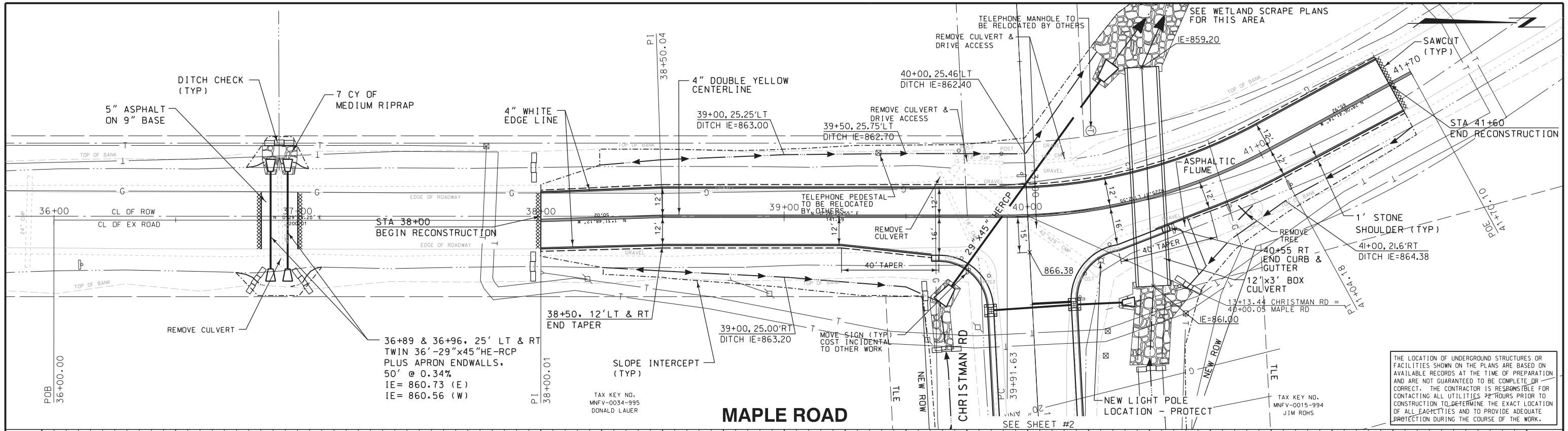

THE LOCATION OF UNDERGROUND STRUCTURES OR FACILITIES SHOWN ON THE PLANS ARE BASED ON AVAILABLE RECORDS AT THE TIME OF PREPARATION AND ARE NOT GUARANTEED TO BE COMPLETE OR CORRECT. THE CONTRACTOR IS RESPONSIBLE FOR CONTACTING ALL UTILITIES 72 HOURS PRIOR TO CONSTRUCTION TO DETERMINE THE EXACT LOCATION OF ALL FACILITIES AND TO PROVIDE ADEQUATE PROTECTION DURING THE COURSE OF THE WORK.

MAPLE ROAD

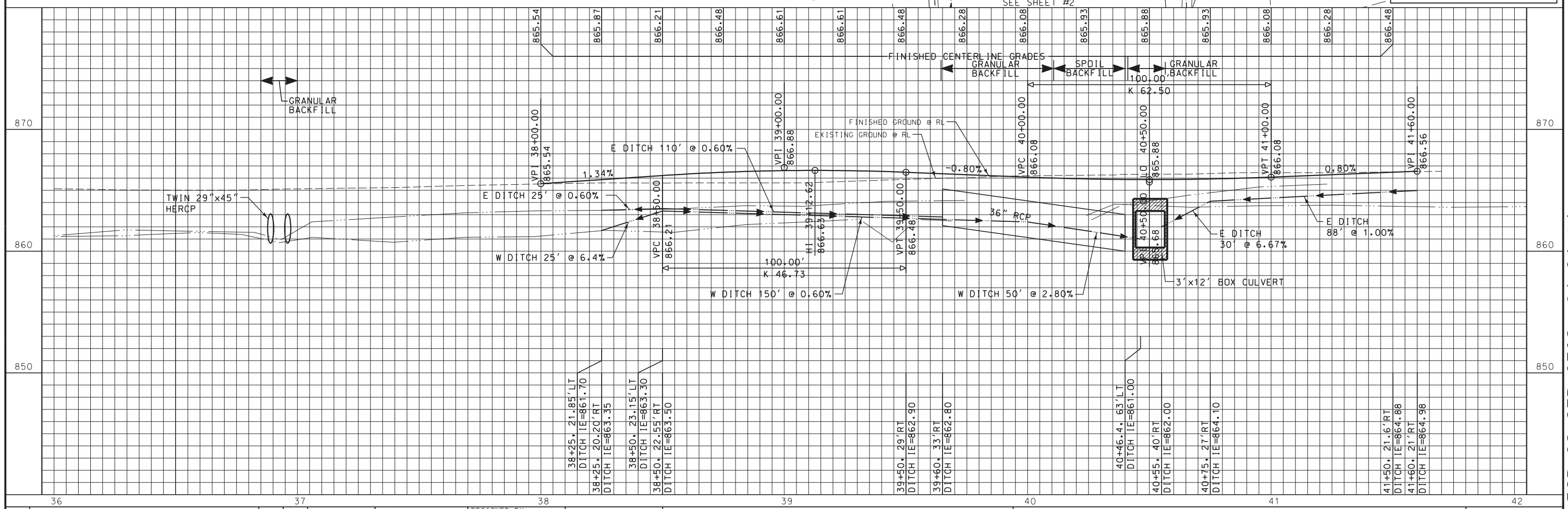

NO.	REVISIONS	BY	DATE

ALL RIGHTS RESERVED

DRAWN BY: PRELIM BJG FINAL BJG
DATE APRIL,2014
DESIGNED BY D.PINKOWSKI
CHECKED BY T.HARTJES
SCALE HORZ: 1"=40' VERT: 1"= 8'

REVISED TO CONFORM TO CONSTRUCTION RECORDS
DATE BY

gai consultants
W175 N11081 STONEWOOD DRIVE, SUITE 103
GERMANTOWN, WI 53022
262.250.8000 • FAX 262.250.8011

CHRISTMAN ROAD RECONSTRUCTION
VILLAGE PROJECT NO. 41167
VILLAGE OF MENOMONEE FALLS
WAUKESHA COUNTY, WISCONSIN

PROJECT NO. R12-0063-100
SHEET NO. 5 OF 21
FILE NO. F-28681

RELEASED FOR CONSTRUCTION 04/24/14

REVISION/PLOT DATE Sht08_PondDetail.dgn 4/23/2014 workspace:cs
PLOT BY : greisbj

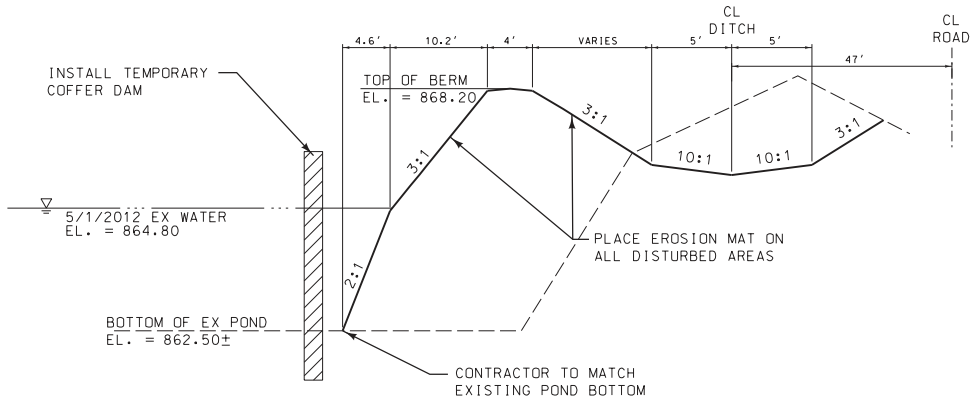

BERM CROSS SECTION

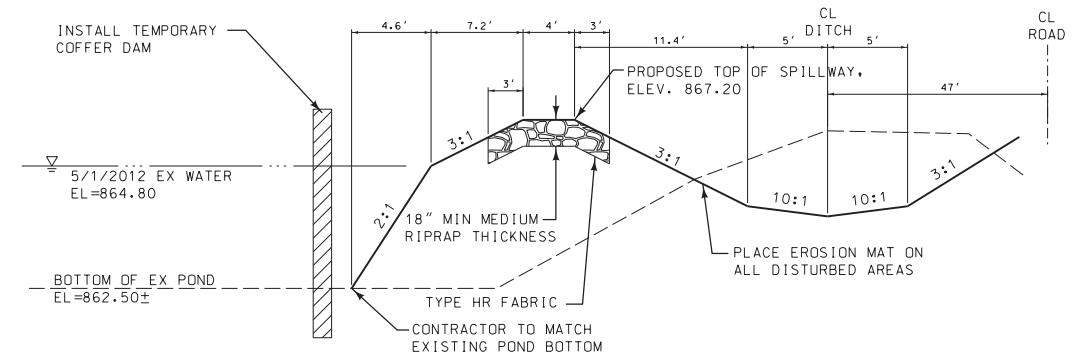

CL OF SPILLWAY CROSS SECTION

STA 15+00

CONSTRUCTION NOTES

1. CONTRACTOR TO INSTALL TEMPORARY COFFER DAM
2. PUMP AND DRAIN POND WATER FROM AREA TO BE FILLED
3. FILL AND COMPACT BERM
4. RESTORE WITH LAWN RESTORATION
5. REMOVE COFFER DAM
6. COST FOR THIS WORK IS INCLUDED IN COMMON EXCAVATION

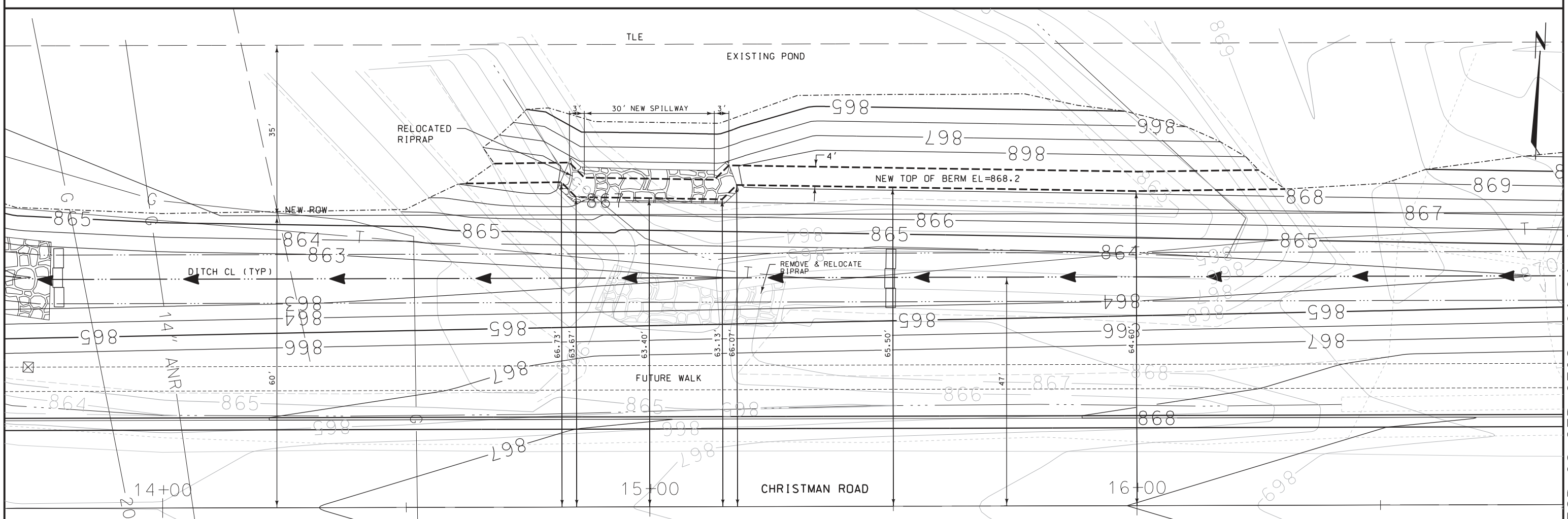

NO.	REVISIONS	BY	DATE

ALL RIGHTS RESERVED

DRAWN BY: PRELIM BJG FINAL BJG
DATE APRIL,2014
DESIGNED BY D.PINKOWSKI
CHECKED BY T.HARTJES
SCALE HORZ: 1"=20'

REVISED TO CONFORM TO CONSTRUCTION RECORDS
DATE BY

gai consultants
W175 N11081 STONEWOOD DRIVE, SUITE 103
GERMANTOWN, WI 53022
262.250.8000 • FAX 262.250.8011

EXISTING POND RESHAPING DETAIL
CHRISTMAN ROAD RECONSTRUCTION
VILLAGE PROJECT NO. 41167
VILLAGE OF MENOMONEE FALLS
WAUKESHA COUNTY, WISCONSIN

PROJECT NO. R12-0063-100
SHEET NO. 8 OF 21
FILE NO. F-28684

RELEASED FOR CONSTRUCTION 04/24/14

REVISION/PLOT DATE Sht09_PondGrading.dgn 4/23/2014 workspaceca
PLOT BY : greisbj

EROSION CONTROL

EROSION CONTROL

A. General.

1. The Contractor shall take all measures necessary to minimize erosion, water pollution and siltation caused by construction of this project. Erosion control measures shall be in accordance with Chapter 2.8.0 of the "Standard Specifications". Subs 107.20. and Section 628. of the "State Specifications", and the details shown on the Plans.

The Contractor shall use the standards prepared by the Wisconsin Department of Natural Resources (WDNR) as reference and guide for erosion control practices. The standards are maintained and located on the WDNR website at:

http://dnr.wi.gov/topic/stormwater/standards/const_standards.html

The Contractor shall comply with the provisions of local erosion control plans and/or ordinances.

2. Erosion Control Plan.
   a. Prior to beginning work, the Contractor may be required to submit an erosion and sediment control plan, detailing specific measures that will be employed in the various stages of construction for approval by the Engineer.

3. Implementation.
   a. The Contractor shall not begin work until after initial erosion and sediment control devices are in place and approved by the Engineer.

B. Erosion Control Measures.

1. Erosion control measures shall include, but not be limited to the following:
   a. Divert upstream runoff from flowing through the construction site.
   b. Protect downstream or adjacent waterways and wetlands with silt fence.
   c. Delay stripping topsoil until required for construction.
   d. Place silt fence or ditch checks in ditches and other drainageways to collect sediment and to slow the velocity of runoff.
   e. Protect storm sewer inlets and the upstream end of culverts with inlet protection or ditch checks.
   f. Prompt removal of excavated material.
   g. Proper storage of backfill and bedding materials including placing silt fence or ditch checks on the downslope sides of spoil piles.
   h. Construction of stone tracking pad (50'x12') access road to construction sites to prevent sediment from being tracked onto roadways.
   i. Prompt (same^day) cleanup of material tracked onto adjacent streets.
   j. Timely restoration of damaged surface areas.

2. Temporary Erosion Control Measures.
   a. The Contractor shall construct temporary erosion control measures, where erosion is likely to be a problem, prior to beginning work on those section(s) of the project. Temporary erosion control measures shall be maintained until after permanent erosion control, such as seeding or sodding, has been established.
   b. any disturbed areas that are inactive for a period of 14 days or longer shall require immediate temporary stabilization
   c. In the event that permanent erosion control measures are not fully implemented in the current construction season, the Contractor shall be responsible for maintaining all necessary temporary erosion control measures until after permanent measures have been completed in the following year.

C. Construction Pit Dewatering.

1. The Contractor shall be required to treat effluent from construction pit dewatering prior to the direct discharge to surface waters or wetlands.
2. Dewatering treatment practices shall be implemented in accordance with DNR Dewatering Technical Standard 1061.
3. Refer to Subsection 102.A of these Special Provisions for instructions for obtaining discharge permits.

D. Dust Control.

1. The Contractor shall minimize the dispersion of dust caused by construction operations in accordance with DNR Dust Control Technical Standard 1068.

E. Installation, Inspection, Maintenace and Restoration of Erosion Control Devices.

1. General.
   a. This subsection applies to all erosion control devices used on this project.

2. Installation.
   a. Install or place erosion control devices either (as appropriate):
      (1) Prior to beginning construction activities;
      (2) Immediately after grading of ditches or slopes is completed;
      (3) Immediately after completing lawn restoration; and/or
      (4) When so ordered by the Engineer.

3. Inspection.
   a. Inspect erosion control devices:
      (1) Within 24 hours after each 0.5 inch or greater rainfall;
      (2) Every Day

4. Maintence.
   a. Maintain erosion control devices for the duration of the project and until after slopes and ditches have been stabilized and turf developed to the extent that future erosion is unlikely, at which time the Contractor shall remove the temporary erosion control device(s).
   b. Remove sediment deposits when the build-up exceeds approximately one-half the volume capacity of the erosion control device.

5. Restoration.
   a. Restore areas immediately after removing erosion control devices by reshaping or grading and placing topsoil, fertilizer, seed and mulch. Place erosion mat or sod to control erosion.

F. Construction Activity.

1. Description.

Major construction activities on this project include:
a. clearing and grubbing
b. site grading
c. detention pond
d. ditching
e. road construction

2. Construction Sequence.

Construction activities will generally consist of the following work sequence:
a. install temporary erosion control
b. clearing and grubbing
c. strip topsoil
d. construct wetland scrape area first
e. construct ditches to divert or direct runoff
f. site grading
g. complete site grading
h. place salvaged topsoil, seed, mulch and erosion mat (where required) and install permanent erosion control measures immediately after site grading is complete
i. construct and restore roadway area

G. Erosion Control Sequence.

No construction may proceed until after the appropriate erosion control devices have been installed and approved by the Engineer. Erosion control measures or devices shall be installed in the following sequence, unless otherwise approved by the Engineer

1. Preconstruction Erosion Control Measures.
   a. Install silt fence as shown on the plans
   b. Construct detention pond.
   c. Protect existing culverts and storm inlets with ditch checks or inlet protection.
   d. Construct stone tracking pad (50'x12') access roads.

2. Erosion Control Measures Installed During Construction.
   a. Place ditch checks in rough graded drainageways.
   b. Protect stockpiles with silt fence.
   c. Immediate restoration of critical areas such as stream banks.
   d. Maintenance of erosion control devices.

3. Permanent Erosion Control Measures
   a. Seed and mulch immediately after placing topsoil.
   b. Install erosion control fabric.
   c. Place ditch checks on steep slopes in ditches.

4. Post Construction Activities.
   a. Remove all temporary erosion control devices after permanent erosion control has been established and the site is stabilized.
   b. Restore areas from which erosion control devices have been removed by seeding, mulching, and erosion mat or sodding as directed by the Engineer.

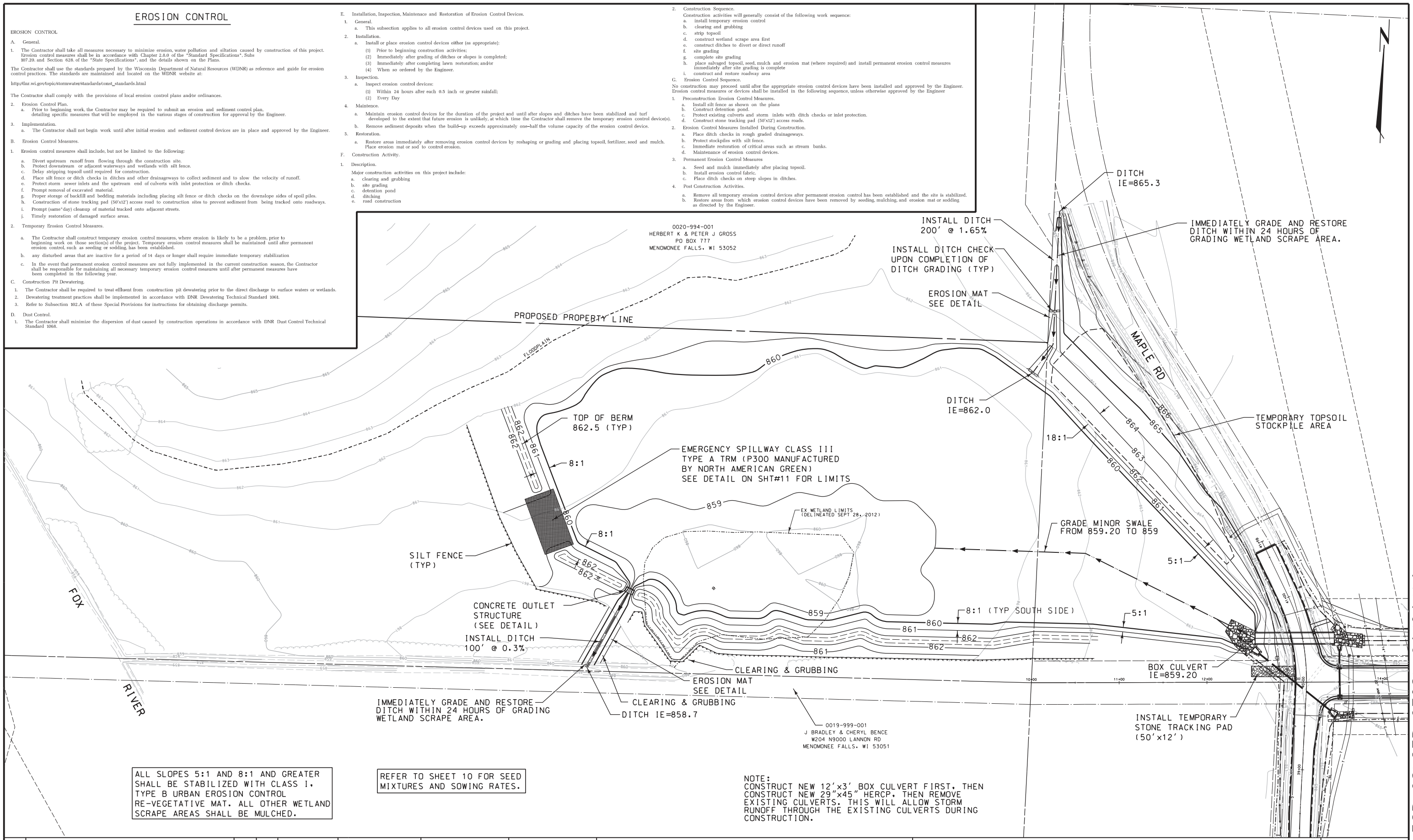

ALL SLOPES 5:1 AND 8:1 AND GREATER SHALL BE STABILIZED WITH CLASS I, TYPE B URBAN EROSION CONTROL RE-VEGETATIVE MAT. ALL OTHER WETLAND SCRAPE AREAS SHALL BE MULCHED.

REFER TO SHEET 10 FOR SEED MIXTURES AND SOWING RATES.

NOTE:
CONSTRUCT NEW 12'x3' BOX CULVERT FIRST. THEN CONSTRUCT NEW 29"x45" HERCP. THEN REMOVE EXISTING CULVERTS. THIS WILL ALLOW STORM RUNOFF THROUGH THE EXISTING CULVERTS DURING CONSTRUCTION.

NO.	REVISIONS	BY	DATE

ALL RIGHTS RESERVED

DRAWN BY: PRELIM BJG FINAL BJG
DATE APRIL,2014
DESIGNED BY D.PINKOWSKI
CHECKED BY T.HARTJES
SCALE HORZ: 1"=100'

REVISED TO CONFORM TO CONSTRUCTION RECORDS
DATE BY

gai consultants
W175 N11081 STONEWOOD DRIVE, SUITE 103
GERMANTOWN, WI 53022
262.250.8000 • FAX 262.250.8011

WETLAND SCRAPE GRADING & EROSION CONTROL
CHRISTMAN ROAD RECONSTRUCTION
VILLAGE PROJECT NO. 41167
VILLAGE OF MENOMONEE FALLS
WAUKESHA COUNTY, WISCONSIN

PROJECT NO. R12-0063-100
SHEET NO. 9 OF 21
FILE NO. F-28685

RELEASED FOR CONSTRUCTION 04/24/14

REVISION/PLOT DATE Sht10_PondPlanting.dgn 4/23/2014
PLOT BY : greisbj
workspace:cs

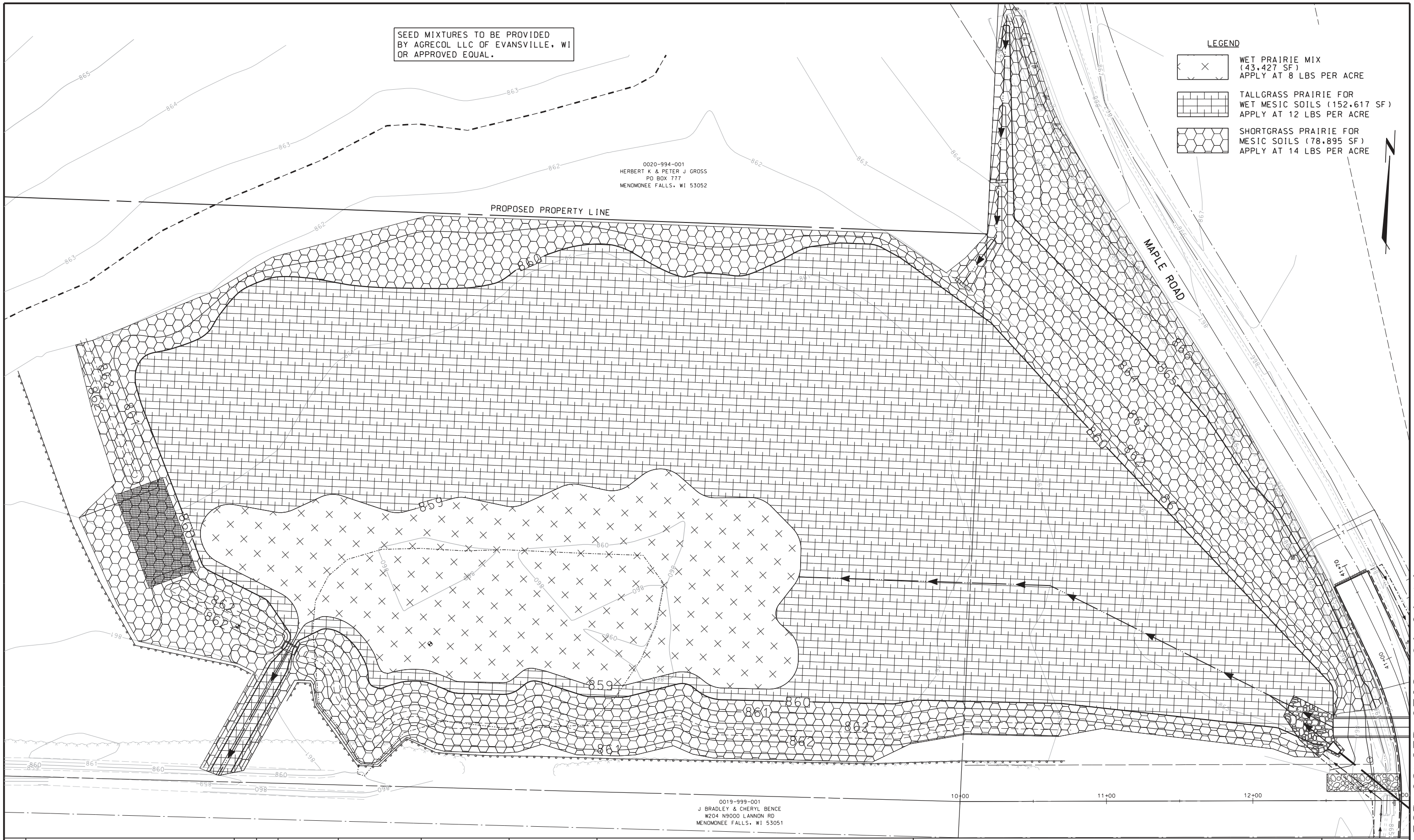

NO.	REVISIONS	BY	DATE

ALL RIGHTS RESERVED

DRAWN BY: PRELIM BJG FINAL BJG
DATE APRIL,2014
DESIGNED BY D.PINKOWSKI
CHECKED BY T.HARTJES
SCALE HORZ: 1"=60'

REVISED TO CONFORM TO CONSTRUCTION RECORDS
DATE BY

gai consultants
W175 N11081 STONEWOOD DRIVE, SUITE 103
GERMANTOWN, WI 53022
262.250.8000 • FAX 262.250.8011

WETLAND SCRAPE PLANTING & LANDSCAPE PLAN
CHRISTMAN ROAD RECONSTRUCTION
VILLAGE PROJECT NO. 41167
VILLAGE OF MENOMONEE FALLS
WAUKESHA COUNTY, WISCONSIN

PROJECT NO. R12-0063-100
SHEET NO. 10 OF 21
FILE NO. F-28686

RELEASED FOR CONSTRUCTION 04/24/14

REVISION/PLOT DATE Sht11_PondDetails.dgn 4/23/2014 workspace:cs
PLOT BY : greisbj

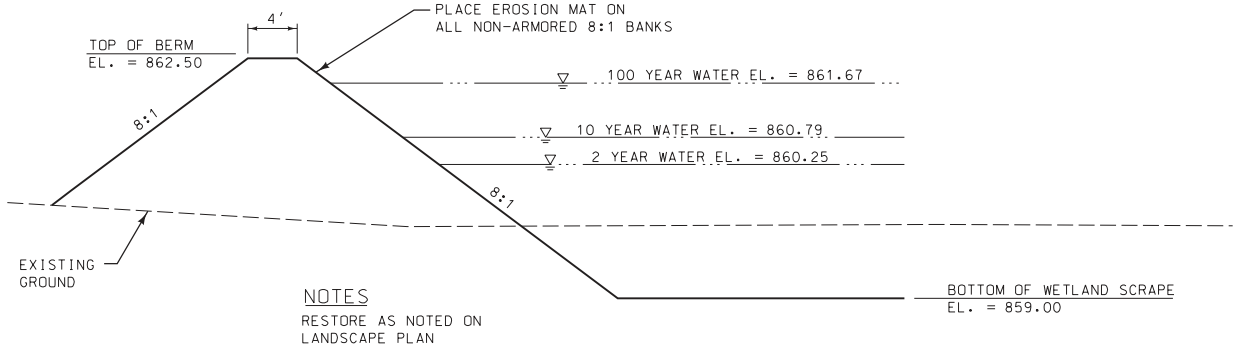

NOTES
RESTORE AS NOTED ON
LANDSCAPE PLAN

WETLAND SCRAPE BERM CROSS SECTION
ALONG SOUTH SIDE ON POND

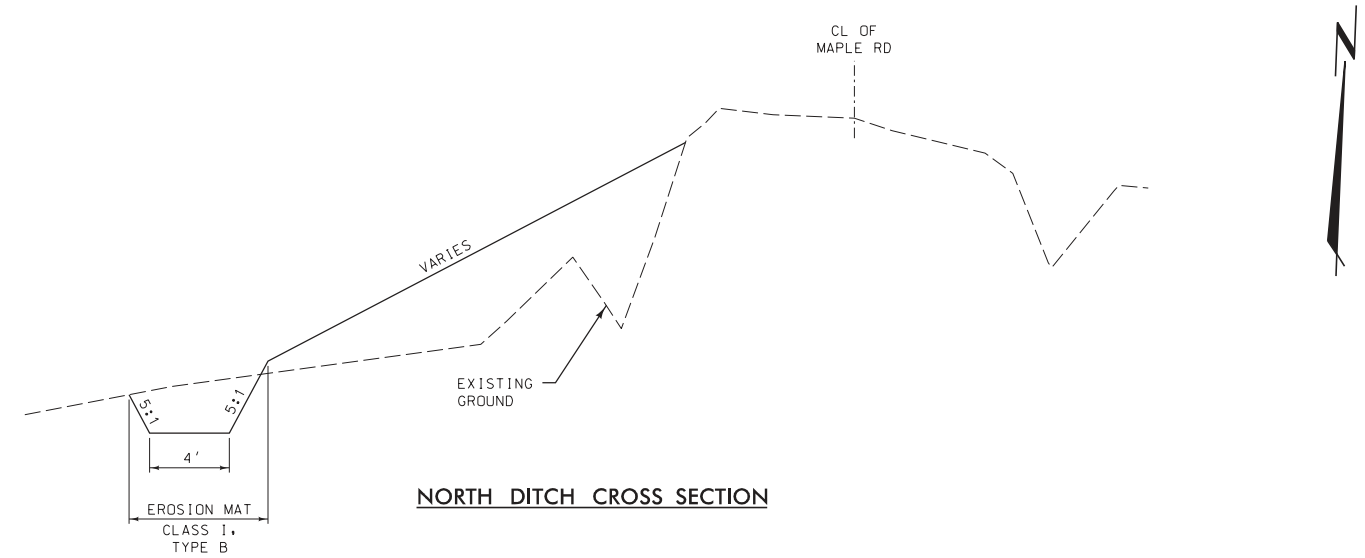

NORTH DITCH CROSS SECTION

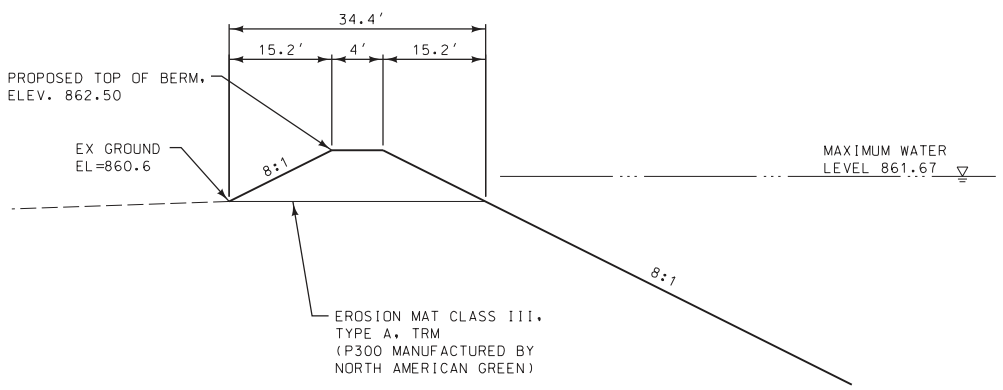

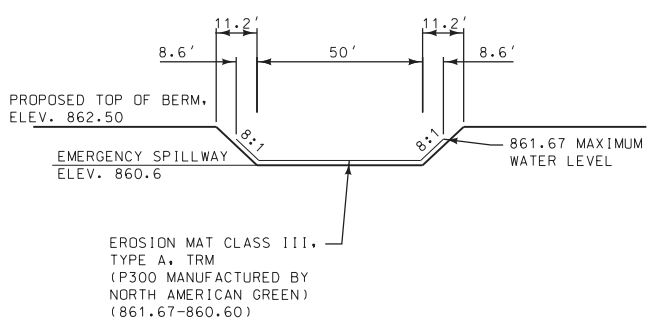

EMERGENCY SPILLWAY

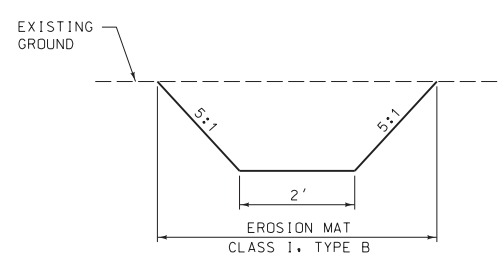

OUTFALL DITCH CROSS SECTION

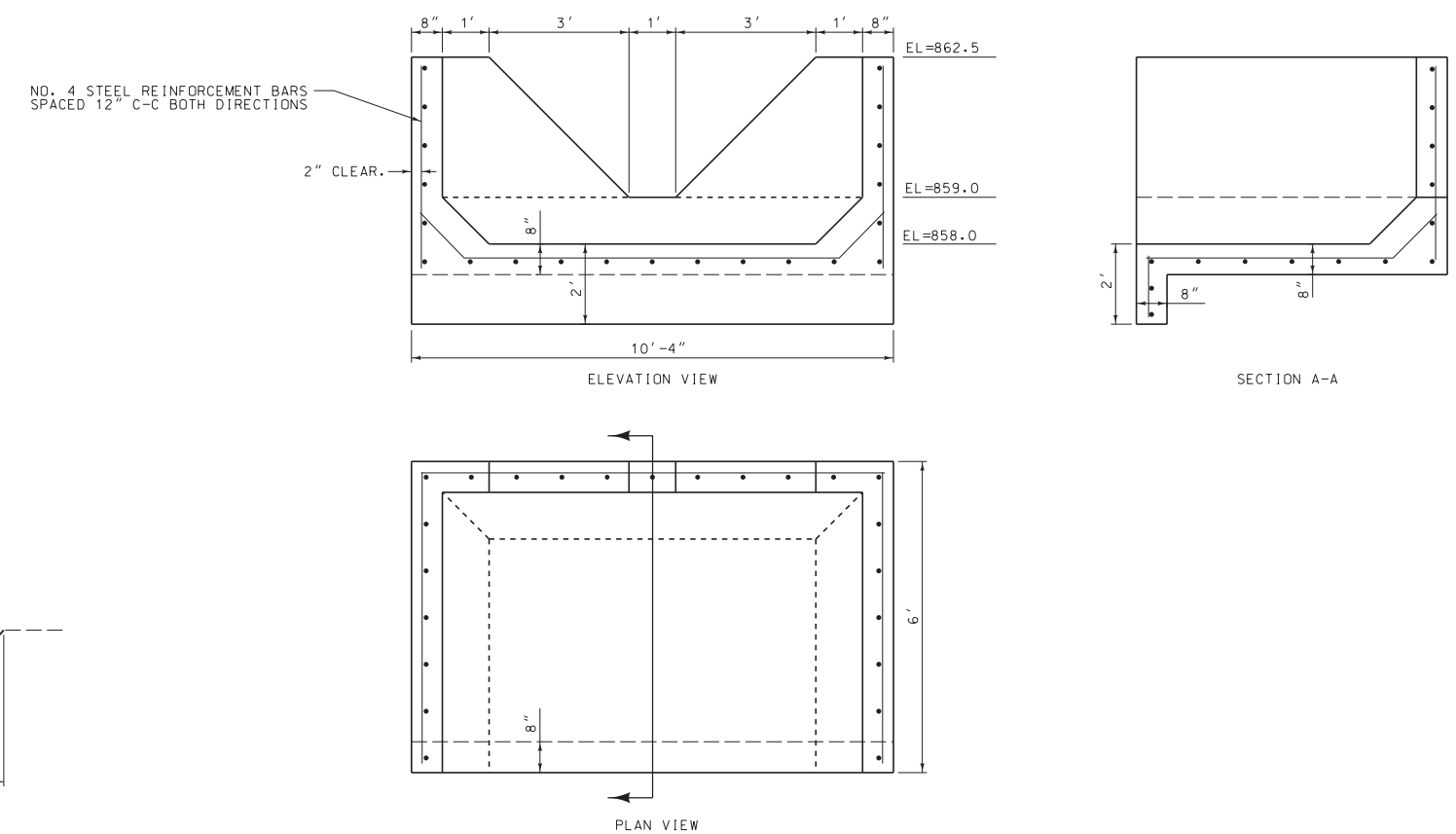

CONCRETE OUTLET STRUCTURE

NO.	REVISIONS	BY	DATE

ALL RIGHTS RESERVED

DRAWN BY: PRELIM BJG FINAL BJG
DATE APRIL,2014
DESIGNED BY D.PINKOWSKI
CHECKED BY T.HARTJES
SCALE NTS

REVISED TO CONFORM TO CONSTRUCTION RECORDS
DATE BY

gai consultants
W175 N11081 STONEWOOD DRIVE, SUITE 103
GERMANTOWN, WI 53022
262.250.8000 • FAX 262.250.8011

WETLAND SCRAPE DETAILS
CHRISTMAN ROAD RECONSTRUCTION
VILLAGE PROJECT NO. 41167
VILLAGE OF MENOMONEE FALLS
WAUKESHA COUNTY, WISCONSIN

PROJECT NO. R12-0063-100
SHEET NO. 11 OF 21
FILE NO. F-28687

RELEASED FOR CONSTRUCTION 04/24/14

2015
SN053001

$H = 860.80 - 858.73 = 2.07FT$

$A_1 = 56{,}027.2SF = 1.286AC$

$A_2 = 202{,}558.5SF = 4.650AC$

Maple Rd WETLAND SCRAPE

$$V = \left(\frac{H}{3}\right)\left(A_1 + A_2 + \sqrt{A_1 + A_2}\right)$$

$$V = \left(\frac{2.07FT}{3}\right)\left(1.286AC + 4.650AC + \sqrt{1.286AC + 4.650AC}\right)$$

$$V = (0.69')(5.936AC + \sqrt{5.936AC})$$

$$V = (0.69')(8.372AC)$$

$$V = \underline{5.777ACFT}$$

CAG
9/15/15

Check w/ Brian
for original
GA / INSP. RPT
JAS-B

$H_1 - H_2 = \cancel{}\ 861.67 - 859.00 = 2.67'$

2015
SWP055001

$A_1 = N/A$

$A_2 = N/A$

Maple Rd + Christman Rd Wetland Scrape
Proposed Plans

$$V = \left(\frac{H_1 - H_2}{3}\right)\left(A_1 + A_2 + \sqrt{A_1 + A_2}\right)$$

$$V = \left(\frac{2.67'}{3}\right)$$ (CANNOT COMPLETE CALCS w/o DATA)

2/12/16
CMG