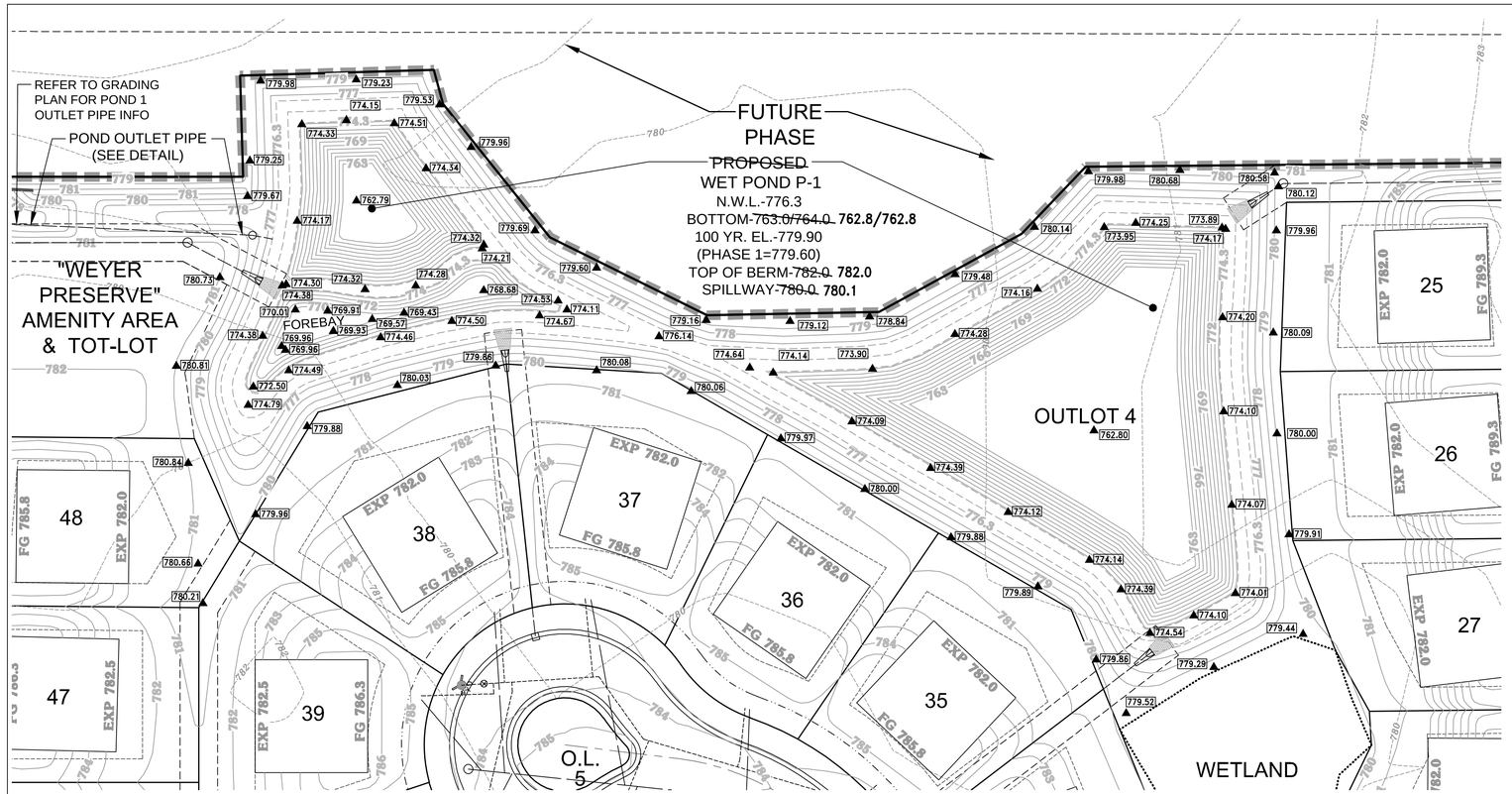

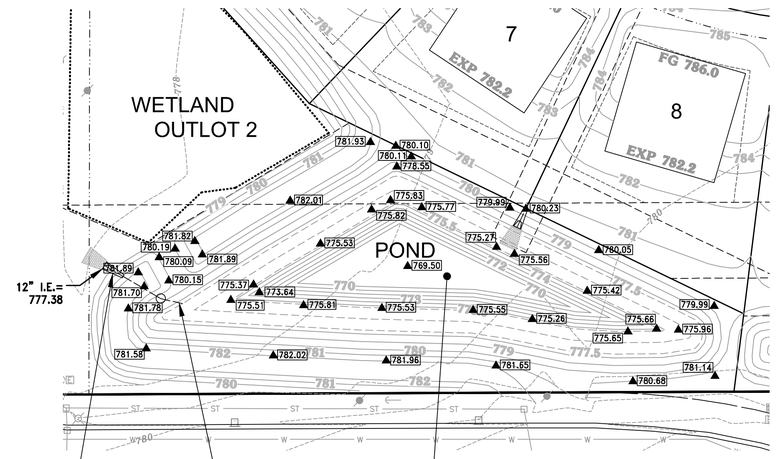

LEGEND:

785	– EXISTING CONTOUR
785	– PROPOSED CONTOUR
×787.3	– PROPOSED SPOT ELEVATION
←	– PROPOSED FLOW ARROW
FG 789.3	– PROPOSED YARD GRADE
EXP 782.0	– PROPOSED EXPOSURE GRADE
782.00	– PROPOSED GRADE
▲781.99	– AS-BUILT GRADE

0 20 40 80

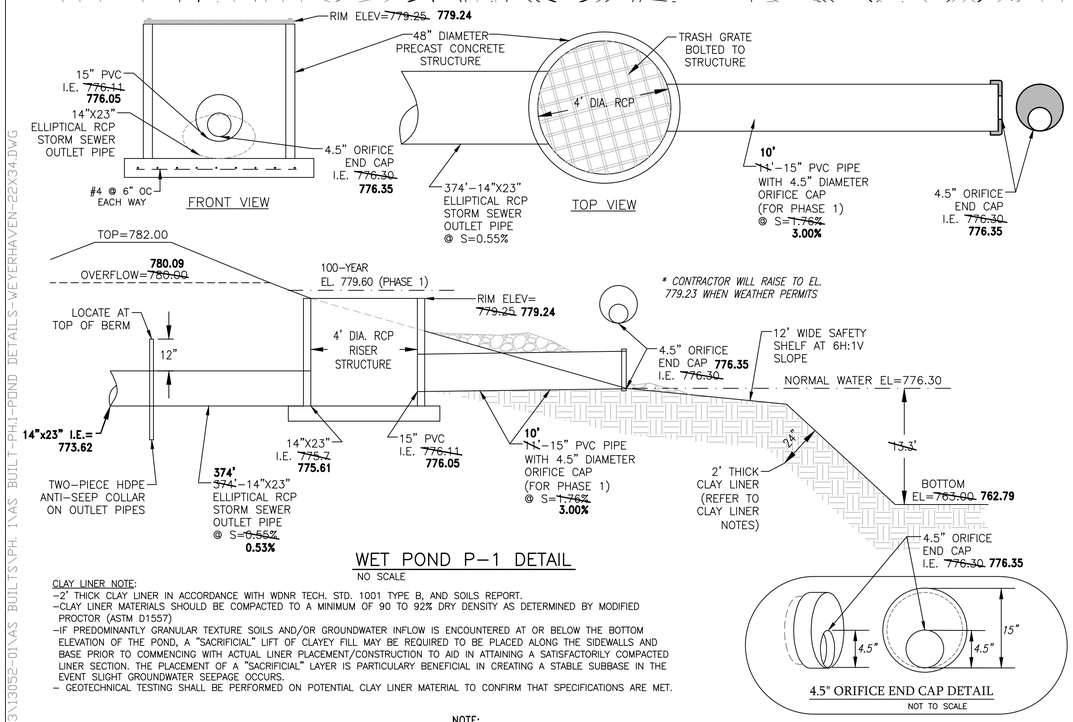

* CONTRACTOR WILL RAISE TO EL. 779.23 WHEN WEATHER PERMITS

WET POND P-1 DETAIL

NO SCALE

CLAY LINER NOTE:
- 2' THICK CLAY LINER IN ACCORDANCE WITH WDNR TECH. STD. 1001 TYPE B, AND SOILS REPORT.
- CLAY LINER MATERIALS SHOULD BE COMPACTED TO A MINIMUM OF 90 TO 92% DRY DENSITY AS DETERMINED BY MODIFIED PROCTOR (ASTM D1557)
- IF PREDOMINANTLY GRANULAR TEXTURE SOILS AND/OR GROUNDWATER INFLOW IS ENCOUNTERED AT OR BELOW THE BOTTOM ELEVATION OF THE POND, A "SACRIFICIAL" LIFT OF CLAYEY FILL MAY BE REQUIRED TO BE PLACED ALONG THE SIDEWALLS AND BASE PRIOR TO COMMENCING WITH ACTUAL LINER PLACEMENT/CONSTRUCTION TO AID IN ATTAINING A SATISFACTORILY COMPACTED LINER SECTION. THE PLACEMENT OF A "SACRIFICIAL" LAYER IS PARTICULARY BENEFICIAL IN CREATING A STABLE SUBBASE IN THE EVENT SLIGHT GROUNDWATER SEEPAGE OCCURS.
- GEOTECHNICAL TESTING SHALL BE PERFORMED ON POTENTIAL CLAY LINER MATERIAL TO CONFIRM THAT SPECIFICATIONS ARE MET.

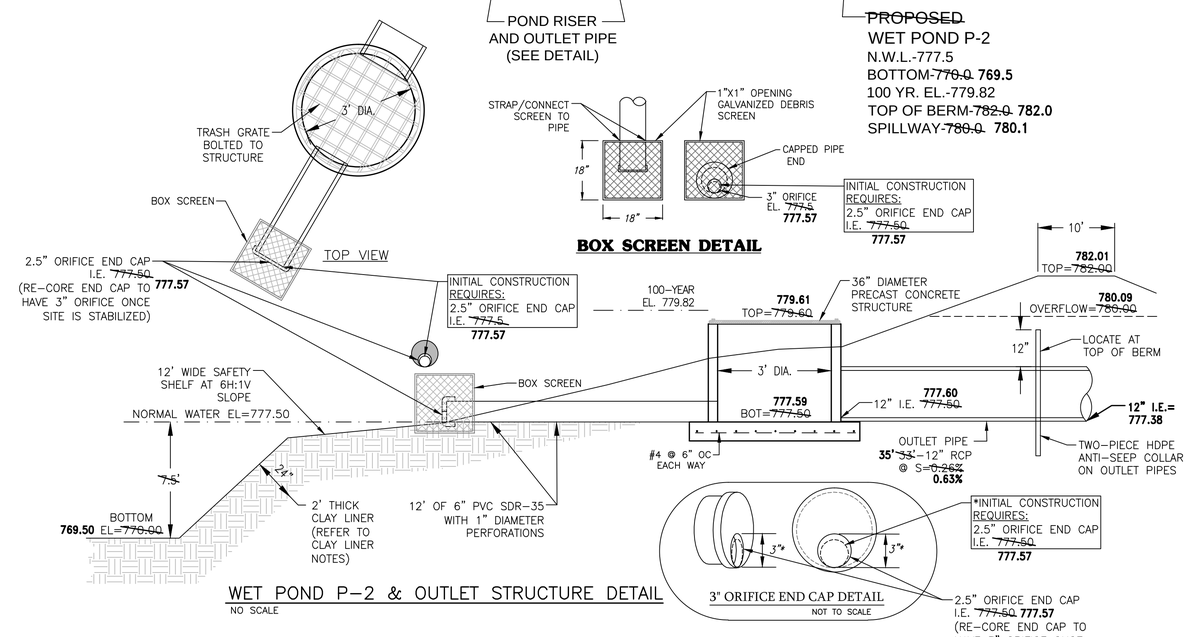

WET POND P-2 & OUTLET STRUCTURE DETAIL

NO SCALE

CLAY LINER NOTE:
- 2' THICK CLAY LINER IN ACCORDANCE WITH WDNR TECH. STD. 1001 TYPE B, AND SOILS REPORT.
- CLAY LINER MATERIALS SHOULD BE COMPACTED TO A MINIMUM OF 90 TO 92% DRY DENSITY AS DETERMINED BY MODIFIED PROCTOR (ASTM D1557)
- IF PREDOMINANTLY GRANULAR TEXTURE SOILS AND/OR GROUNDWATER INFLOW IS ENCOUNTERED AT OR BELOW THE BOTTOM ELEVATION OF THE POND, A "SACRIFICIAL" LIFT OF CLAYEY FILL MAY BE REQUIRED TO BE PLACED ALONG THE SIDEWALLS AND BASE PRIOR TO COMMENCING WITH ACTUAL LINER PLACEMENT/CONSTRUCTION TO AID IN ATTAINING A SATISFACTORILY COMPACTED LINER SECTION. THE PLACEMENT OF A "SACRIFICIAL" LAYER IS PARTICULARY BENEFICIAL IN CREATING A STABLE SUBBASE IN THE EVENT SLIGHT GROUNDWATER SEEPAGE OCCURS.
- GEOTECHNICAL TESTING SHALL BE PERFORMED ON POTENTIAL CLAY LINER MATERIAL TO CONFIRM THAT SPECIFICATIONS ARE MET.

CONTRACTOR IS REQUIRED TO CONTACT DIGGERS HOTLINE TOLL FREE TO OBTAIN LOCATION OF UNDERGROUND UTILITIES PRIOR TO COMMENCING THE WORK. WISCONSIN STATUTE 182.0715 REQUIRES MIN. OF 3 WORK DAYS NOTICE BEFORE YOU EXCAVATE.
CALL DIGGERS HOTLINE 1-800-242-8511

NOTE:
EXISTING UNDERGROUND UTILITY INFORMATION WAS OBTAINED FROM AVAILABLE RECORDS. THE ENGINEER MAKES NO GUARANTEE AS TO THE ACCURACY OF THIS INFORMATION. VERIFICATION TO THE SATISFACTION OF THE CONTRACTOR OF ALL UNDERGROUND UTILITIES, WHETHER OR NOT SHOWN ON THE PLANS, SHALL BE ASSUMED AS A CONDITION OF THE CONTRACT. THE CONTRACTOR SHALL NOTIFY THE ENGINEER OF ANY DISCREPANCIES BETWEEN LOCATION OF UTILITIES IN THE FIELD AND LOCATIONS SHOWN ON THE PLANS.

H:\C900\953\13052-01\AS BUILTS\PH. 1\AS BUILT-PH1-POND DETAILS-WEYERHAVEN-22X34.DWG

WISCONSIN PROFESSIONAL ENGINEER
JOSHUA D. PUDELKO
E-39420
WAUWATOSA, WI

TRIO DESIGN • LAND SURVEYING • CIVIL ENGINEERING
17700 W. CAPITOL DRIVE
BROOKFIELD, WI 53045
PHONE: (262) 790-1480
FAX: (262) 790-1481
EMAIL: jpudelko@trioeng.com

NEUMANN COMPANIES INC

PROJECT: WEYERHAVEN
SINGLE FAMILY RESIDENTIAL SUBDIVISION
VILLAGE OF MENOMONEE FALLS, WISCONSIN
BY: NEUMANN COMPANIES, INC.
N27W24075 PAUL COURT
PEWAUKEE, WI 53072

REVISION HISTORY

DATE	DESCRIPTION
05/07/2015	PER VILLAGE COMMENTS
02/02/2015	PER VILLAGE COMMENTS
01/23/2015	PER VILLAGE COMMENTS
12/11/2014	AS BUILT PLANS

DATE: MAY 07, 2015

JOB NUMBER: 13052
VMF: 00115

DESCRIPTION: POND DETAILS & CROSS SECTIONS

SHEET
C1.3